hansgrohe

Rainfinity
Handshower Set 130 3-Jet PowderRain, 2.5 GPM
Finish: **matte black** Part no. : **26913671**

Description

Features

- Consists of: Handshower, Handshower holder, Handshower hose
- Spray modes: PowderRain, Intense PowderRain, MonoRain
- Select button for comfortable alternation of spray modes
- Flow: 2.5 GPM (9.5 L/Min)
- Pivot connector prevents hose from tangling
- Rinseable screen seal

Technology

Select SELECT

Quick Clean

Design awards

GERMAN DESIGN AWARD WINNER 2020

iF GOLD AWARD 2019

reddot award 2019 best of the best

Compliance / Sustainability

MAP

UPC C ®

Product image
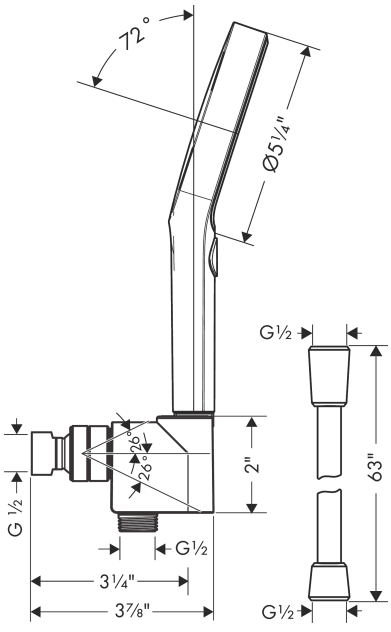
Scale drawing